ZENESSIS®

ENERGY SOLUTIONS

Product:
ZEN 220 TI

Green Stage

IVECO

MADE IN EUROPE

ISO 9001 CERTIFIED

- Liquid cooling
- 50 Hz
- Three-phase
- Diesel

DIESEL GENERATOR ZEN 220 TI	STANDBY POWER (ESP)	PRIME POWER (PRP)
Power (kVA)	220	200
Power (kW)	175	160
Speed (rpm)	1500	
Voltage (V)	400 / 230	
Power factor (cos phi)	0,8	
Amperage (Amp)	290	

Endress Zenessis Group S.R.L. certifications:
ISO 9001: 2008, ISO 14001: 2005, ISO 18001 : 2008.

ZENESSIS generators are CE compliant, and are tested according to the EU legislation on noise levels 2000/14 / EC.

Reference ambient conditions: 1000 mbar; 25° C; 30% relative humidity; power according to ISO 3046 / ISO 8528 standards.

Prime power (PRP) – ISO 8528
Prime power (PRP) represents the continuous power a generator is able to provide continuously while supplying a variable electrical load when operating for an unlimited number of hours per year, under the agreed operating conditions, maintenance intervals and procedures being performed as prescribed by the manufacturer.

Standby Power (ESP) – ISO 8528

Standby Power (ESP) is the maximum power available at a variable load, under the operating conditions provided, that a generator is able to provide in case of power failure or under test conditions, for maximum 200 working hours per year. Maintenance intervals and procedures being performed as prescribed by the manufacturer.

Endress Zenessis Group S.R.L.
Offices:
Bucharest: km 16 A1 – Ciorogarla, Sos. Bucuresti, Nr. 108
D38486 Apenburg - Winterfeld, In Altensalzwedel 49
Production:
Romania, Bocsa, jud. Caras – Severin, Str. Medresului, Nr. 17, 325300

1. DIESEL ENGINE

ENGINE SPECIFICATIONS	
Type	IVECO
Model	NEF67TM7
No. of cylinders & arrangement	6 in line
Induction system	Turbocharged and intercooler
Cooling system	Liquid cooling
Standby power (kWm)	195
Speed (rpm)	1500
Displacement (l)	6,7
Bore & Stroke (mm)	104 x 132
Compression factor	17,5:1
Regulator	Mechanical
Total oil capacity (l)	17,2
Coolant capacity of engine (l)	25,5
Fuel consumption at 100% load in prime mode (l / h)	42,1

2. ALTERNATOR

ALTERNATOR SPECIFICATIONS	Strathon / Leroy Somer
Model	ECO 220 KW / TAL 044 M
Frequency (Hz)	50
Concept	Brushless, 4 poles
Phases	3 + n
Voltage (V)	400 / 230
Protection class	H
Excitation system	Electronic
Performance	93%
Protection	IP23
Certification test	EN 10204 : 2001

3. CONTROL PANEL

Made in metal box, IP54 degree, with lock. The control panel is equipped with the ComAp AMF25 control module, with the possibility of starting and stopping the generator, both in automatic and in electric mode. The control panel monitors the power grid and can command and control the ATS panel (automatic transfer switch).

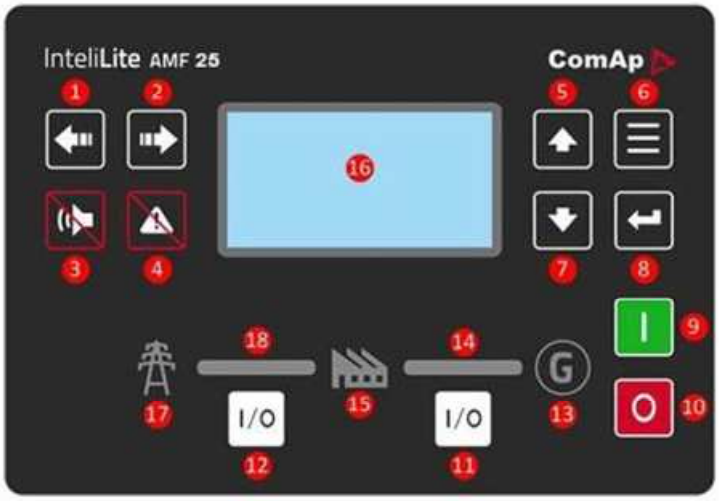

1. **Left** button
2. **Right** button
3. **HORN RESET** button
4. **FAULT RESET** button
5. **UP** button
6. **PAGE** button
7. **DOWN** button
8. **ENTER** button
9. **START** button
10. **STOP** button
11. **GCB** button. Works in MAN and TEST modes only
12. **MCB** button. Works in MAN and TEST modes only
13. **GENERATOR** status indicator
14. **GCB ON**. Green LEDs are on if GCB is closed and Gen-set is healthy.
15. **LOAD**
16. **Graphic** B/W display, 132x64 pixels
17. **MAINS** status indicator
18. **MCB ON**. Green LEDs are on if MCB is closed and Mains is healthy

♦ **Control panel standard specifications:**
The command and control panel is mounted inside the casing, in a metal box with IP 54, equipped with a viewing glass, equipped with:
- ComAp AMF 25 command module
- Static battery charger
- Emergency stop button & circuit breaker fuses
- Overcurrent differential protection
- Protection relays

♦ **Configuration**:

1. ComAp AMF 25 command module
2. Circuit Breaker protection
3. Locks
4. Alarm
5. START button ON/OFF
6. Hinges
7. Maintenance schedule
8. Metal box

♦ **Command module standard specifications:**

- Microprocessor control
- 132 x 64 pixel LCD display
- Programming on front panel as well as through PC software
- Control buttons and soft touch navigation
- Remote communication via USB or with optional modules via RS232, RS485, Ethernet or SMS
- Store 350 events with date and time
- Maintenance programming 3 levels
- Engine heater control – Optional

•**Displays**:
Engine: engine speed; oil pressure; coolant temperature; running time; battery voltage; maintenance data.
Alternator: voltage (L – L, L – N); current (L1 – L2 – L3); frequency; kW; Pf; kVAr; kWh,kVAh, kVarh; phase sequence.
Main network: voltage (L – L, L – N); frequency, mains ready; mains off; generator set ready, generator set disconnected, active power kW, apparent power kVA, reactive power kVA r, power factor, phase sequence.
•**Warning**: battery faulty charging, low battery voltage, fail to stop, low fuel level, overload, phase reversing, speed sensor failure.
•**Alarms**: low oil pressure, high engine temperature, under / over voltage, under /over frequency, under /overvoltage, ECU fault -optional.
•**Status displays**: missed start, emergency stop, low oil pressure, high engine temperature, under /overspeed, under / over frequency, under / overvoltage, oil sensor, phase rotation, overload, overcurrent group, phase reversal.

♦ **Static battery charger**: Made with TSD technology, with high efficiency. Protected for short-circuit currents, it can be used as a current source, input voltage 196-264 V, output voltage 27.6 V / 5A or 13.8 V / 5A.

♦ **Standards:**

Electrical safety / EMC, BS EN 60950; BS EN 60950 – 6 – 2 EMC; BS EN 61000 – 6 – 4 EMC.

4. CANOPY

Made of zinc plate steel, painted in electrostatic field, soundproofed, fire protect. It is modularly designed with in-door access doors on all sides of the generator. The exhaust pan is residential type, mounted inside the casing. The carcasses are designed to optimize the cooling of the engine and alternator assembly, and can be mounted outdoors, providing protection against weathering and low noise levels.

1. Control panel
2. Access door for control module
3. Engine and alternator access door
4. Points for crane lifting
5. Retention tray
6. Radiator cap
7. Hot air outlet grills
8. Handles provided with locks
9. Lifting/pulling holes
10. Base frame
11. Emergency button
12. Exhaust Gas Valve
13. Cable access space
14. Air intake grills
15. Rubber legs

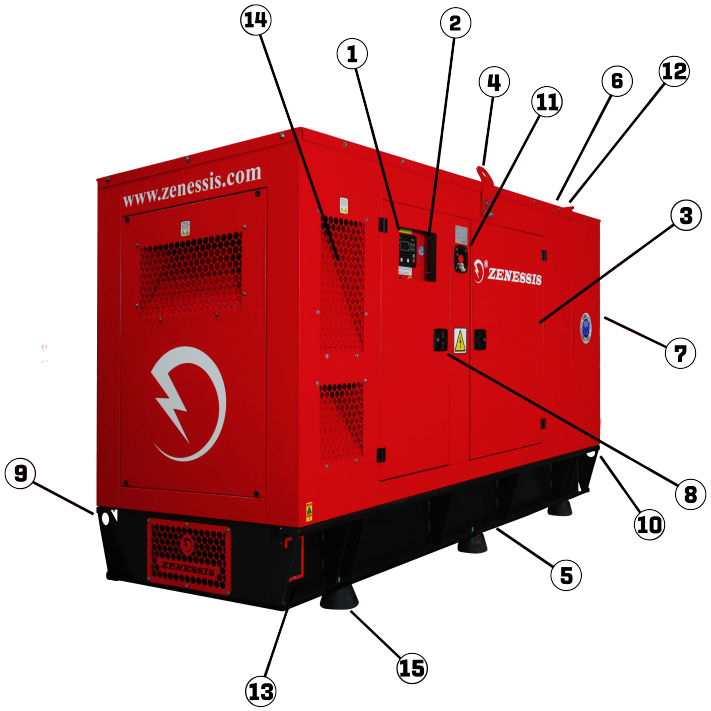

5. DIMENSIONS & WEIGHT

Opened generator sizes & weight	
Sizes (length x width x height) (mm)	2890 x 1110 x 2050
Weight (kg)	1350
Fuel tank capacity (liters)	350
Noise level (from distance of 7m)	82 db
Closed generator sizes & weight	
Sizes (length x width x height) (mm)	3189 x 1180 x 2000
Weight (kg)	2150
Fuel tank capacity (liters)	350
Noise level (from distance of 7m)	70 db

6. STANDARD FEATURES

Control & comand panel with indicators and measuring devices, IP 54 protection

Thermostatic heater for cooling liquid

Stating charger for charger

Oversized starting battery

Dinamic alternator for battery charging

Emergency stop button

Chassis with fuel tank dimensioned for an 8 hour autonomy with retention tray

Rubber legs

Vibration dampers

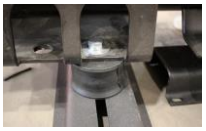

Metal hinges

Device for measuring fuel level

Access doors provided with locks

Electric lines protected by tubing and seal

System for manipulation with crane or forklift

Residential exhaust pipe

Fireproof antiphonic pillow

7. OPTIONAL FEATURES

Anti-condensation embedding system for electric panels

Heating system for fuel/ oil

Circulation pump for heating cooling liquid

Oil evacuation pump

Motorized AAR, patented invention ENDRESS-Patent OSIM 00048/2015

3/4 poles differential protection

Sockets 400V/ 230V

Fuel filter with water detection

Bypass panel-petented invention ENDRESS-Patent OSIM 00010/ 2012

Auto trailer

Remote control start

Lack of grounding protection

Interior lighting with switches operated at door opening

Liquid retention tray + fuel tank with double wall

Liquid leak detection sensor

Exterior fuel filler cap with lock

Fire extinguisher with internal housing support

Super soundproof housing

Intake air heating spark plug

Grounding electrodes

Fuel transfer automatic pump

Mobile distribution panel with 4 sockets

Cable reel

Fire detector with automatic shutdown generator set

Fire extinguishing system with inert gas

BOCSA,str. Medresului 17, Tel.: 0040.255.227.825; Fax: 0040.255.227.828 . BUCURESTI: km 16 A1 – Ciorogarla, Sos. Bucuresti, Nr. 108; Tel.: 0040.21.350.09.95; Fax: 0040.31.817.66.08. E-mail: office@endress-group.ro; Web: www.endress-group.ro

Optional:
RAR homologated auto trailer
Model: EGR 3000

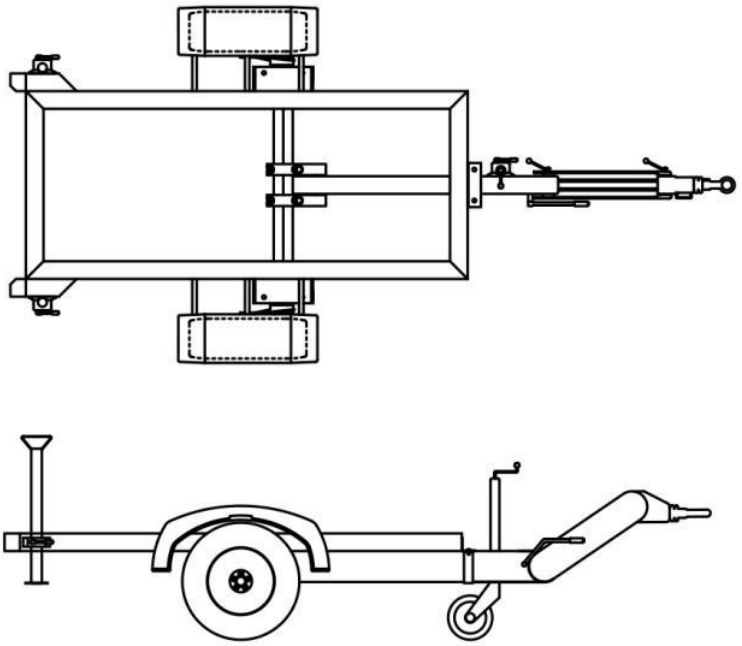

Created in Germany – Assembled in Romania
Warranty: 24 months or 3000 operating hours

ENDRESS PRODUCTS ARE IN A CONTINUOUS DEVELOPMENT AND IMPROVEMENT PROCESS. FOR THIS REASON, ENDRESS ZENESSIS GROUPRESERVES THE RIGHT TO MODIFY THE INFORMATION FOUND IN THESE LEAFLETS WITHOUT PRIOR NOTIFICATION

BOCSA,str. Medresului 17, Tel.: 0040.255.227.825; Fax: 0040.255.227.828 . BUCURESTI: km 16 A1 – Ciorogarla, Sos. Bucuresti, Nr. 108; Tel.: 0040.21.350.09.95; Fax: 0040.31.817.66.08. E-mail: office@endress-group.ro; Web: www.endress-group.ro